TECHNICAL DESCRIPTION

IT SOFTWARE SOLUTIONS FOR BUSINESS

TD09 v5.2 — WSC2015

INFORMATION AND COMMUNICATION TECHNOLOGY

WorldSkills International, by a resolution of the Technical Committee and in accordance with the Constitution, the Standing Orders and the Competition Rules, has adopted the following minimum requirements for this skill for the WorldSkills Competition.

The Technical Description consists of the following:

Effective 12.08.14

Stefan Praschl
Chair Technical Committee

Michael Fung
Vice Chair Technical Committee

1 INTRODUCTION

1.1 NAME AND DESCRIPTION OF THE SKILL COMPETITION

1.1.1 The name of the skill competition is

IT Software Solutions for Business

1.1.2 Description of the associated work role(s) or occupation(s).

The rapid pace of globalization over the past decade has been largely driven by developments in Information and Communication Technology (ICT). IT specialists are increasingly in great demand in several areas, one of which is providing software solutions for business.

The development of software solutions to improve business productivity encompasses many different skills and disciplines. Key to these is an awareness of the fast changing nature of the industry and the ability to keep up with the rapid pace of change.

IT software solution professionals always work closely with clients to modify existing systems or create new systems. They may modify "off the shelf" software and integrate it into the existing systems. They often work as part of a team of software professionals responsible for the requirement specification, system analysis and design, construction, testing, training and implementation, as well as maintenance of a business software system.

The tasks performed by IT software solution professionals include but not limited to the following:

- Review current system and present ideas for improvement, including cost benefit analysis
- Analyse and specify user requirements
- Produce detailed specifications
- Develop software system for the required solution and test the software solution thoroughly
- Prepare user training materials, train users, and present software solution to users
- Install, implement and maintain the software system

IT software solutions professionals can be employed in large, medium and small enterprises as software engineer, in consulting firms as consultant, and in software houses as contractor.

They can operate in a wide variety of roles including development role to tailor-make or customize software solutions, supporting role to operate system, business analyst role to provide solution to simplify and automate routine office and business activities, as well as training role to train user in using the application software

1.2 THE RELEVANCE AND SIGNIFICANCE OF THIS DOCUMENT

This document contains information about the standards required to compete in this skill competition, and the assessment principles, methods and procedures that govern the competition.

Every Expert and Competitor must know and understand this Technical Description.

In the event of any conflict within the different languages of the Technical Descriptions, the English version takes precedence.

1.3 ASSOCIATED DOCUMENTS

Since this Technical Description contains only skill-specific information it must be used in association with the following:

- WSI – Competition Rules
- WSI – WorldSkills Standards Specification framework
- WSI – WorldSkills Assessment Strategy (when available)
- WSI – Online resources as indicated in this document
- Host Country – Health and Safety regulations

2 THE WORLDSKILLS STANDARDS SPECIFICATION (WSSS)

2.1 GENERAL NOTES ON THE WSSS

The WSSS specifies the knowledge, understanding and specific skills that underpin international best practice in technical and vocational performance. It should reflect a shared global understanding of what the associated work role(s) or occupation(s) represent for industry and business (www.worldskills.org/WSSS).

The skill competition is intended to reflect international best practice as described by the WSSS, and to the extent that it is able to. The Standards Specification is therefore a guide to the required training and preparation for the skill competition.

In the skill competition the assessment of knowledge and understanding will take place through the assessment of performance. There will not be separate tests of knowledge and understanding.

The Standards Specification is divided into distinct sections with headings and reference numbers added.

Each section is assigned a percentage of the total marks to indicate its relative importance within the Standards Specification. The sum of all the percentage marks is 100.

The Marking Scheme and Test Project will assess only those skills that are set out in the Standards Specification. They will reflect the Standards Specification as comprehensively as possible within the constraints of the skill competition.

The Marking Scheme and Test Project will follow the allocation of marks within the Standards Specification to the extent practically possible. A variation of five percent is allowed, provided that this does not distort the weightings assigned by the Standards Specification.

2.2 WORLDSKILLS STANDARDS SPECIFICATION

SECTION		RELATIVE IMPORTANCE (%)
1	**Work organization and management**	**5**
	The individual needs to know and understand: • The principles and practices that enable productive team work • The principles and behaviour of systems • The aspects of systems that contribute to sustainable products, strategies and practices • How to take initiatives and be enterprising in order to identify, analyse and evaluate information from a variety of sources	

	The individual shall be able to: • Plan each day's production schedule according to available time and take into account time limitations and deadlines • Use a computer or device and a range of software packages • Apply research techniques and skills to keep up-to-date with the latest industry guidelines • Review own performance against the expectations and needs of the client and organization	
2	**Communication and interpersonal skills**	**5**
	The individual needs to know and understand: • The importance of listening skills • The necessity of using discretion and confidentiality when dealing with clients • The importance of resolving misunderstandings and conflicting demands • The importance of establishing and maintaining customer confidence and productive working relationships • The value of written and oral communication skills	

	The individual shall be able to:
	• Use literacy skills to:
	  • Follow documented instructions from a supplied guide
	  • Interpret workplace instructions and other technical documents
	  • Keep up-to-date with latest industry guidelines
	• Use oral communication skills to:
	  • Discuss and offer suggestions regarding a system specification
	  • Keep client updated regarding system progress
	  • Negotiate with client regarding project budget and timeline
	  • Gather and confirm client requirements
	  • Present the proposed and final software solution
	• Use written communications skills to:
	  • Document a software system (e.g. technical document, user guide)
	  • Keep client updated regarding system progress
	  • Confirm that the created application meets the original specifications and obtain user sign-off for completed system
	• Use team communication skills to:
	  • Collaborate with others to develop the required outcomes
	  • Work well in group problem solving
	• Use project management skills to:
	  • Prioritize and schedule tasks
	  • Allocate resources to tasks	

3	Problem solving, innovation and creativity	5
	The individual needs to know and understand: • The common types of problem which may occur within software development • The common types of problem which may occur within business organization • Diagnostic approaches to problem solving • Trends and developments in the industry including new platforms, languages, conventions, and technical skills	

	The individual shall be able to:
	• Use analytical skills to:
	  • Synthesize complex or diverse information
	  • Determine the functional and non-functional requirements of the specification
	• Use investigation and learning skills to:
	  • Obtain user requirements (e.g. interviews, questionnaire, document search and analysis, joint application design, and observation)
	  • Research encountered problems independently
	• Use problem-solving skills to:
	  • Identify and resolve problems in a timely manner
	  • Gather and analyse information skilfully
	  • Develop alternatives for decision making, select the most appropriate alternative and produce the required solution	

4	**Analysing and designing software solutions**	**30**
	The individual needs to know and understand: • The importance of considering all possible options and deriving the best solution based on sound analytical judgment and the client's best interests • The importance of using system analysis and design methodologies (e.g. Unified Modelling Language, Model-View-Control (MVC) software framework, Design Patterns) • The need to be up to date with new technologies and make a judgment about the appropriateness of adopting them • The importance of optimization of system design with an emphasis on modularity and reusability	

	The individual shall be able to:
	• Analyse systems using:
	  • Use case modelling and analysis (e.g. Use Case Diagram, Use Case Description, Actor Description, Use Case Package)
	  • Structural modelling and analysis (e.g. Object, Class, Domain Class Diagram)
	  • Dynamic modelling and analysis (e.g. Sequence Diagram, Collaboration Diagram, State Diagram, Activity Diagram)
	  • Data modelling tools and techniques (e.g. Entity Relationship Diagram, Normalization, Data Dictionary)
	• Design systems using:
	  • Class Diagram, Sequence Diagram, State Diagram, Activity Diagram
	  • Object design and package
	  • Relational or object database design
	  • Human-computer interface design
	  • Security and controls design
	  • Multi-tier application design	

5	**Developing software solutions**	**40**
	The individual needs to know and understand: • The importance of considering all possible options and deriving the best solution to meet the user requirements and the client's best interests • The importance of using system development methodologies (e.g. object-oriented technology) • The importance of considering all normal and abnormal scenarios, and exception handlings • The importance of following standards (e.g. code convention, style guide, user interface designs, managing directories and files) • The importance of accurate and consistent version control • Using existing code as a basis for analysis and modifications • The importance of selecting the most appropriate development tool from those provided	
	The individual shall be able to: • Use database management system to construct, store and manage the data for the required system (MySQL or SQL Server) • Use latest software development environments and tools to modify existing codes and write new codes of a client-server based software solution (.NET or Java) • Evaluate and integrate appropriate libraries and frameworks into the software solution • Build multi-tier applications • Construct a web enabled and/or mobile interface for client-server based system	

6	**Testing software solutions**	**10**
	The individual needs to know and understand: • Troubleshoot common software applications problems • The importance of thoroughly tested solutions • The importance of documenting testing	
	The individual shall be able to: • Plan testing activities (e.g. unit testing, volume testing, integration testing and acceptance testing) • Design test cases with data and check results of test cases • Debug and handle errors • Report on the test process	
7	**Documenting software solutions**	**5**
	The individual needs to know and understand: • The importance of thoroughly documenting developed solutions	

	The individual shall be able to:
	• Produce professional quality:
	  • User documentation
	  • Technical documentation	

3 THE ASSESSMENT STRATEGY AND SPECIFICATION

3.1 GENERAL GUIDANCE

Assessment is governed by the WorldSkills Assessment Strategy. The Strategy establishes the principles and techniques to which WorldSkills assessment must conform.

Expert assessment practice lies at the heart of the WorldSkills Competition. For this reason it is the subject of continuing professional development and scrutiny. The growth of expertise in assessment will inform the future use and direction of the main assessment instruments used by the WorldSkills Competition: the Marking Scheme, Test Project, and Competition Information System (CIS).

Assessment at the WorldSkills Competition falls into two broad types: measurement and judgment. These are referred to as **objective** and **subjective**, respectively. For both types of assessment the use of explicit benchmarks against which to assess each Aspect is essential to guarantee quality.

The Marking Scheme must follow the weightings within the Standards Specification. The Test Project is the assessment vehicle for the skill competition, and also follows the Standards Specification. The CIS enables the timely and accurate recording of marks, and has expanding supportive capacity.

The Marking Scheme, in outline, will lead the process of Test Project design. After this, the Marking Scheme and Test Project will be designed and developed through an iterative process, to ensure that both together optimize their relationship with the Standards Specification and the Assessment Strategy. They will be agreed by the Experts and submitted to WSI for approval together, in order to demonstrate their quality and conformity with the Standards Specification.

Prior to submission for approval to WSI, the Marking Scheme and Test Project will liaise with the WSI Skill Advisors in order to benefit from the capabilities of the CIS.

4 THE MARKING SCHEME

4.1 GENERAL GUIDANCE

This section describes the role and place of the Marking Scheme, how the Experts will assess Competitors' work as demonstrated through the Test Project, and the procedures and requirements for marking.

The Marking Scheme is the pivotal instrument of the WorldSkills Competition, in that it ties assessment to the standards that represent the skill. It is designed to allocate marks for each assessed aspect of performance in accordance with the weightings in the Standards Specification.

By reflecting the weightings in the Standards Specification, the Marking Scheme establishes the parameters for the design of the Test Project. Depending on the nature of the skill and its assessment needs, it may initially be appropriate to develop the Marking Scheme in more detail as a guide for Test Project design. Alternatively, initial Test Project design can be based on the outline Marking Scheme. From this point onwards the Marking Scheme and Test Project should be developed together.

Section 2.1 above indicates the extent to which the Marking Scheme and Test Project may diverge from the weightings given in the Standards Specification, if there is no practicable alternative.

The Marking Scheme and Test Project may be developed by one person, or several, or by all Experts. The detailed and final Marking Scheme and Test Project must be approved by the whole Expert Jury prior to submission for independent quality assurance. The exception to this process is for those skill competitions which use an external designer for the development of the Marking Scheme and Test Project.

In addition, Experts are encouraged to submit their Marking Schemes and Test Projects for comment and provisional approval well in advance of completion, in order to avoid disappointment or setbacks at a late stage. They are also advised to work with the CIS Team at this intermediate stage, in order to take full advantage of the possibilities of the CIS.

In all cases the complete and approved Marking Scheme must be entered into the CIS at least eight weeks prior to the Competition using the CIS standard spreadsheet or other agreed methods.

4.2 ASSESSMENT CRITERIA

The main headings of the Marking Scheme are the Assessment Criteria. These headings are derived in conjunction with the Test Project. In some skill competitions the Assessment Criteria may be similar to the section headings in the Standards Specification; in others they may be totally different. There will normally be between five and nine Assessment Criteria. Whether or not the headings match, the Marking Scheme must reflect the weightings in the Standards Specification.

Assessment Criteria are created by the person(s) developing the Marking Scheme, who are free to define criteria that they consider most suited to the assessment and marking of the Test Project. Each Assessment Criterion is defined by a letter (A-I).

The Mark Summary Form generated by the CIS will comprise a list of the Assessment Criteria.

The marks allocated to each criterion will be calculated by the CIS. These will be the cumulative sum of marks given to each aspect of assessment within that Assessment Criterion.

4.3 SUB CRITERIA

Each Assessment Criterion is divided into one or more Sub Criteria. Each Sub Criterion becomes the heading for a WorldSkills marking form.

Each marking form (Sub Criterion) has a specified day on which it will be marked.

Each marking form (Sub Criterion) contains either objective or subjective Aspects to be marked. Some Sub Criteria have both objective and subjective aspects, in which case there is a marking form for each.

4.4 ASPECTS

Each Aspect defines, in detail, a single item to be assessed and marked together with the marks, or instructions for how the marks are to be awarded. Aspects are assessed either objectively or subjectively and appear on the appropriate marking form.

The marking form lists, in detail, every Aspect to be marked together with the mark allocated to it and a reference to the section of the skill as set out in the Standards Specification.

The sum of the marks allocated to each Aspect must fall within the range of marks specified for that section of the skill in the Standards Specification. This will be displayed in the Mark Allocation Table of the CIS, in the following format, when the Marking Scheme is reviewed from C-8 weeks. (Section 4.1)

	CRITERIA										TOTAL MARKS PER SECTION
STANDARD SPECIFICATION SECTIONS											
TOTAL MARKS PER CRITERION											100

4.5 SUBJECTIVE MARKING

Subjective marking uses the 10 point scale below. To apply the scale with rigour and consistency, subjective marking should be conducted using:

- benchmarks (criteria) to guide judgment against each Aspect
- the scale to indicate:
  - 0: non attempt;
  - 1-4: below industry standard;
  - 5-8: at or above industry standard;
  - 9-10: excellence.

4.6 OBJECTIVE MARKING

A minimum of three experts will be used to judge each aspect. Unless otherwise stated only the maximum mark or zero will be awarded. Where they are used, partial marks will be clearly defined within the Aspect.

4.7 THE USE OF OBJECTIVE AND SUBJECTIVE ASSESSMENT

The final deployment of objective or subjective assessment will be agreed when the Marking Scheme and Test Project are finalized. The table below is advisory only for the development of the Test Project and Marking Scheme.

SECTION	CRITERION	MARKS		
		Subjective	Objective	Total
A	System Analysis and Design (Use Case Diagram, Class Diagram, Sequence Diagram, State Diagram, Activity Diagram, Entity Relationship Diagram, Database Design, Object Design, Interface Design, and Security & Control Design)	0	20-35	20-35
B	Software Development (Database Construction and Programming) and Testing (Test Plan, Case & Data)	0	45-70	45-70
C	Development Standards (Naming Convention, File Management, Adherence to Style Guide, and Consistent User Interface)	0	3-5	3-5
D	System Documentation (Technical Documentation and User Documentation)	0	5	5
E	Presentation of Solution (PowerPoint Presentation)	5	0	5
Total		**5**	**95**	**100**

4.8 COMPLETION OF SKILL ASSESSMENT SPECIFICATION

Marking groups will be formed in accordance with the Competition Rules.

The skill assessment criteria developed by the external writer are clear concise aspect specifications which explain exactly how and why a particular mark is awarded.

There can be three different types of objective criteria in the Test Project. The table below shows an explanation of the three types:

TYPE	EXAMPLE	MAX. MARKS	CORRECT	NOT CORRECT
Full marks or zero marks	The pie chart shows data labels as percentages	0.20	0.20	0
Deduct from full marks on a predetermined sliding scale	Report is formatted as specified (deduct 0.1 mark for each error)	0.5	0.5	0 – 0.4
Add to zero marks on a predetermined progressive scale	Solver criteria specified correctly (add 0.1 mark for each criterion)	1.0	1.0	0.0 – 0.9

4.9 SKILL ASSESSMENT PROCEDURES

Each Expert will perform as a member of a marking team of the Test Project.

Experts will be divided into marking teams allocating equal objective and subjective marking where possible. The composition of the marking teams will be decided by the CE and DCE with the aim of having a balance of new and experienced Experts in each.

Experts will be divided into different cultural groups for subjective marking where possible.

The External Project Writer will provide the marking criteria. Experts will discuss these marking criteria upon arrival at the Competition.

The Experts will agree on the final marking scheme at the Competition. Subjective marks should not exceed 5%.

5 THE TEST PROJECT

5.1 GENERAL NOTES

Sections three and four govern the development of the Test Project. These notes are supplementary.

Whether it is a single entity, or a series of stand-alone or connected modules, the Test Project will enable the assessment of the skills in each section of the WSSS.

The purpose of the Test Project is to provide full and balanced opportunities for assessment and marking across the Standards Specification, in conjunction with the Marking Scheme. The relationship between the Test Project, Marking Scheme and Standards Specification will be a key indicator of quality.

The Test Project will not cover areas outside the Standards Specification, or affect the balance of marks within the Standards Specification other than in the circumstances indicated by Section 2.

The Test Project will enable knowledge and understanding to be assessed solely through their applications within practical work.

The Test Project will not assess knowledge of WorldSkills rules and regulations.

This Technical Description will note any issues that affect the Test Project's capacity to support the full range of assessment relative to the Standards Specification. Section 0 refers.

5.2 FORMAT/STRUCTURE OF THE TEST PROJECT

The Test Project will be in the form of a case study that will represent typical functions that might be asked of a software developer who is highly competent in the skills described. The scenario will be presented as a project with clearly defined deliverables. These deliverables will be grouped to enable a modular approach whereby discrete tasks can be completed in a session. The Competitors will select the appropriate component(s) of the software for the task.

Common data files will be provided in English only and only English versions of the software will be provided.

5.3 TEST PROJECT DESIGN REQUIREMENTS

The Test Project must be based on the scenario agreed by the Experts at the previous WorldSkills Competition and as such the next Competition is based on Event/Logistics Management. The problems set should not require any in-depth knowledge of the industry. It is recommended that sponsorship/support be sought from a representative within the Competition Organizer. Ideally the project would be one that addresses an actual need for a charitable or other not-for-profit organization in the Host Country, so that the expenses (material and effort) are not wasted.

This scenario shall include an extensive simulation of workplace activities related to IT and shall be composed of a variety of forms of information gathering, processing and distribution. The project should be designed so that at the end of a Competition session, that session's work can be marked.

Where work carries over from one session to another, the Competitor's work will be backed up for marking at the end of each session. For example, the project might require development of a database – table definitions, data imports, form, and query and report construction. The project might specify a certain number of deliverables to be completed in the first session of the day. At the break, the solutions to those deliverables would be backed-up and marked. Any work done to those deliverables after the break would not be marked.

5.4 TEST PROJECT DEVELOPMENT

The Test Project MUST be submitted using the templates provided by WorldSkills International (www.worldskills.org/expertcentre). Use the Word template for text documents and DWG template for drawings.

5.4.1 Who develops the Test Project or modules

The Test Project/modules are developed by an independent external project writer ideally in consultation with an industry partner. The stakeholders of the organization for whom the Test Project will be developed would be consulted.

The external writer will provide the following services:

- Prepare the details of the scenario of the case study of the Test Project;
- Specify and document the deliverables of the system to be developed;
- Provide the test data;
- Provide sample solutions;
- Provide marking criteria in accordance with the specifications of the Technical Description and the WSI CIS marking system.

All registered Experts in the Competition are invited to submit an "Expression of Interest" for nominating an individual or organization to be the external writer. All nominations are to be emailed to the WSI Technical Director. WSI will review all nominations and select the most appropriate applicant.

The external writer will only communicate with the WSI Technical Director and will have no contact with the Project Liaison Team and the Experts.

5.4.2 How and where is the Test Project or modules developed

The Test Project/modules are prepared by an external project writer.

Each Expert is expected to submit a sample reference to enable the external writer to better understand the Test Project requirements. The submission will be done through the Discussion Forum within a timeframe that will be stipulated by the Chief Expert. Each Expert will also submit the report and review about the Test Project, marking and data files used in Leipzig as a sample reference as well.

A "Project Liaison Team" (PLT) will be formed at least eight months before the Competition. This team will comprise the Chief Expert, the Deputy Chief Expert and three other Experts who have had experience of at least one previous International Competition. These three Experts will be selected by the Skill Management Team (SMT) which will endeavour to ensure representation of a cross-section of participating Members. The role of the Project Liaison Team will be to assist the external writer by answering questions relating to the Competition and procedures only. The Project Liaison Team will have no knowledge of the contents of the Test Project. The external writer will only communicate with the Project Liaison Team via the WSI Technical Director.

Ideally the external writer, or a representative, will present the Test Project to the Experts. This could be in person or via electronic means.

Each Expert at the Competition should perform as a member of a marking team for the Test Project. The SMT will determine the composition of the marking teams. The SMT will determine the proportion of marks each assessment team is responsible for. The Chief Expert and Deputy Chief Expert may or may not be involved in the marking.

5.4.3 When is the Test Project developed

The Test Project is developed according to the following timeline:

TIME	ACTIVITY
Within two (2) months after the last Competition	Each Expert must submit a review of that Competition's Test Project, including marking guide
Twelve (12) months before the Competition	Expression of Interest to write Test Project open to Experts
Nine (9) months before the Competition	The Project Liaison Team is formed
Six (6) months before the Competition	The external writer advises the Experts via the Project Liaison Team of the inclusion of subjectivity
Three (3) months before the Competition	The Test Project is developed and sent to the Technical Director for filing until the Competition
Two (2) months before the Competition	The Style Guidelines and project overview are circulated to the Competitors on the website
At the Competition	The Test Project is revealed to the Experts. Experts are required to advise their Competitors immediately about the Test Project

5.5 TEST PROJECT VALIDATION

The Test Project will be validated by the Experts at the Competition. Each marking team will be responsible for validation of the components of the Test Project that they will mark. They will ensure that:

- The Test Project sample solutions provided by the external writer are a valid representation of the stated requirements;
- The marking schemes are appropriately developed;
- The Test Project meets the Technical Description;
- An accurate list of required data files for each session is available;
- Each marking team will present and explain what is required from the project assigned to each team including the marking criteria.

5.6 TEST PROJECT SELECTION

The Test Project will be provided to the Technical Director by the external project writer, three months prior to the Competition.

5.7 TEST PROJECT CIRCULATION

The Test Project is circulated via the website as follows:

The Test Project is not circulated prior to the Competition.

It is recommended that external neutral translators are engaged to translate the Test Project and marking scheme into languages required by Experts and their Competitors so that translated versions are available on the first preparation day prior to the Competition. No translation of Test Projects or marking schemes should be necessary after arrival at the Competition. The official translator and the

Experts from each country/region must evaluate that this translation is in line with the English version upon arriving at the Competition (Test Project, marking scheme and style guidelines).

Style guidelines and project overview shall be circulated two months before the Competition.

The Test Project will be revealed to the Experts on the first preparation day prior to the Competition. At that stage Experts must contact their Competitors and inform them of the Test Project.

5.8 TEST PROJECT COORDINATION (PREPARATION FOR COMPETITION)

Coordination of the Test Project will be undertaken by the SMT in conjunction with the Project Liaison Team and WSI Technical Director.

5.9 TEST PROJECT CHANGE AT THE COMPETITION

No changes will be made to the Test Project developed by the external writer prior to the Competition with the exception of amendments to technical errors in the Test Project document.

5.10 MATERIAL OR MANUFACTURER SPECIFICATIONS

Specific material and/or manufacturer specifications required to allow the Competitor to complete the Test Project will be supplied by the Competition Organizer and are available from www.worldskills.org/infrastructure located in the Expert Centre.

Not applicable.

6 SKILL MANAGEMENT AND COMMUNICATION

6.1 DISCUSSION FORUM

Prior to the Competition, all discussion, communication, collaboration, and decision making regarding the skill competition must take place on the skill specific Discussion Forum (http://forums.worldskills.org). Skill related decisions and communication are only valid if they take place on the forum. The Chief Expert (or an Expert nominated by the Chief Expert) will be the moderator for this Forum. Refer to Competition Rules for the timeline of communication and competition development requirements.

6.2 COMPETITOR INFORMATION

All information for registered Competitors is available from the Competitor Centre (www.worldskills.org/competitorcentre).

This information includes:

- Competition Rules
- Technical Descriptions
- Marking Schemes
- Test Projects
- Infrastructure List
- Health and Safety documentation
- Other Competition-related information

6.3 TEST PROJECTS [AND MARKING SCHEMES]

Circulated Test Projects will be available from www.worldskills.org/testprojects and the Competitor Centre (www.worldskills.org/competitorcentre).

6.4 DAY-TO-DAY MANAGEMENT

The day-to-day management of the skill during the Competition is defined in the Skill Management Plan that is created by the Skill Management Team led by the Chief Expert. The Skill Management Team comprises the Jury President, Chief Expert and Deputy Chief Expert. The Skill Management Plan is progressively developed in the six months prior to the Competition and finalized at the Competition by agreement of the Experts. The Skill Management Plan can be viewed in the Expert Centre (www.worldskills.org/expertcentre).

7 SKILL-SPECIFIC SAFETY REQUIREMENTS

Refer to Host Country/Region Health and Safety documentation for Host Country/Region regulations.

8 MATERIALS AND EQUIPMENT

8.1 INFRASTRUCTURE LIST

The Infrastructure List details all equipment, materials and facilities provided by the Competition Organizer.

The Infrastructure List is available at www.worldskills.org/infrastructure.

The Infrastructure List specifies the items and quantities requested by the Experts for the next Competition. The Competition Organizer will progressively update the Infrastructure List specifying the actual quantity, type, brand, and model of the items. Items supplied by the Competition Organizer are shown in a separate column.

At each Competition, the Experts must review and update the Infrastructure List in preparation for the next Competition. Experts must advise the Technical Director of any increases in space and/or equipment.

At each Competition, the Technical Observer must audit the Infrastructure List that was used at that Competition.

The Infrastructure List does not include items that Competitors and/or Experts are required to bring and items that Competitors are not allowed to bring – they are specified below.

8.2 MATERIALS, EQUIPMENT AND TOOLS SUPPLIED BY COMPETITORS IN THEIR TOOLBOX

Not applicable.

8.3 MATERIALS, EQUIPMENT AND TOOLS SUPPLIED BY EXPERTS

Not applicable.

8.4 MATERIALS AND EQUIPMENT PROHIBITED IN THE SKILL AREA

- The Competitors may use ear protection;
- The Competitor may not listen to music;
- The Competitor may not bring:
  - Additional software;
  - Mobile phones;
  - Portable digital devices (tablets, PDAs, etc.);
  - External storage devices (memory sticks, flash drives etc.);
- Equipment must not have any access to the internal memory storage devices. The Competition Organizer will ensure that these are disabled;
- The Experts hold the right to disallow certain equipment brought into the Competition;
- The Competitors may be allowed Internet access in the Competition area. This will be on designated computers and will be limited to one 15 minute block per Competitor per session. This time will be included in the competition time.

8.5 PROPOSED WORKSHOP AND WORKSTATION LAYOUTS

Workshop layouts from previous competitions are available at www.worldskills.org/sitelayout.

Example workshop layout:

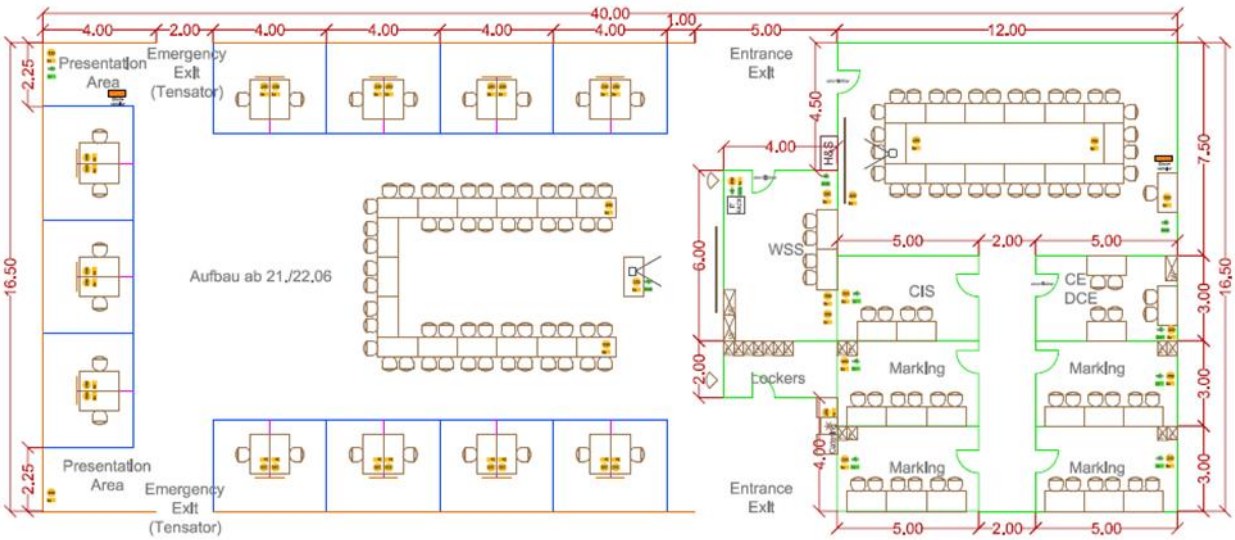

- The design should consider the privacy of each Competitor but must also recognize the need for ease of supervision by the Experts. It must be readily apparent should a Competitor have a need to call an Expert. The height of the walls between two Competitors should be no higher than 120cm;
- The design should consider the requirements for maximizing sustainability;
- There should be at least four separate and secure marking rooms, if possible, for Experts with adequate space (possible for five Experts to sit in a line) to accommodate a marking team. Each marking team is provided with the room key to secure the marking process;
- There should be secure rooms for the CE and DCE to enable them to manage the skill;
- A well-equipped Competitor briefing area is required. This must have a projector, screen, and PA system with an easy to use computer, audio, video and other capabilities.

9 VISITOR AND MEDIA ENGAGEMENT

To maximize visitor and media engagement the following ideas will be considered:

- Display screens;
- Test Project descriptions;
- Enhanced understanding of Competitor activity;
- Competitor profiles;
- Career opportunities;
- Daily reporting of competition status.

10 SUSTAINABILITY

- Recycling;
- Use of ‘green’ materials;
- Use of completed Test Projects after the Competition;
- Use of a pdf writer rather than printing.