DX175

Version:00
Date:230323

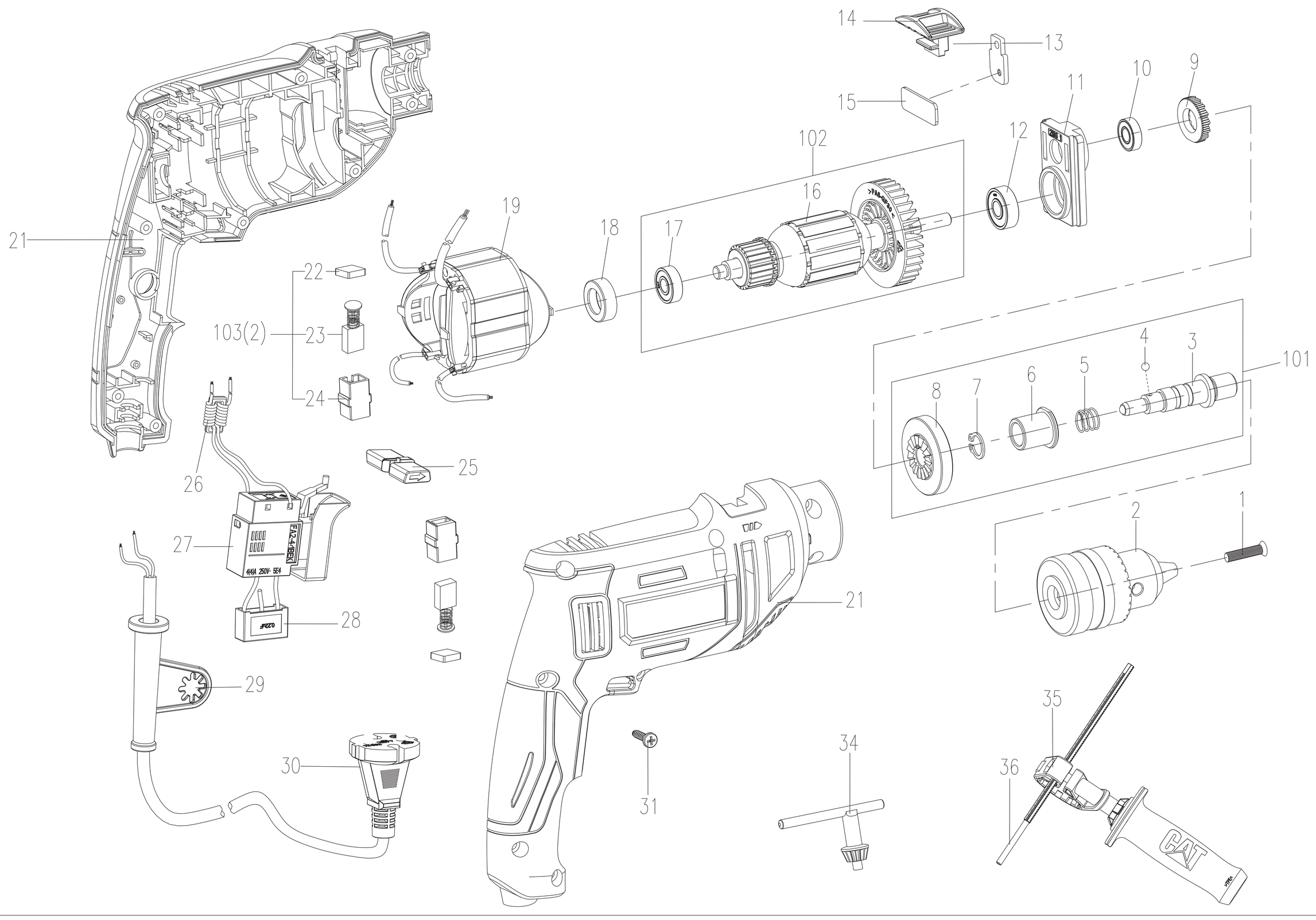

Model No	Position No	Material No	Description	QTY	Remarks	Recommended order ratio	Serial No
DX175	1	60073396	Screw Left M6x25	1			
DX175	2	60073397	Chuck	1		1%	
DX175	3	60073398	Output spindle	1			
DX175	4	60073399	Steel Ball	1			
DX175	5	60073400	Spring	1			
DX175	6	60073401	Oil-retaining bearing	1			
DX175	7	60073402	Elastic Washer 12	1			
DX175	8	60073403	Driven Gear I	1		1%	
DX175	9	60073404	Fixed End Gear	1		1%	
DX175	10	60073405	Rolling Bearing	1			
DX175	11	60073406	Central Bearing Bracket	1			
DX175	12	60073407	Rolling Bearing	1			
DX175	13	60073408	Impact Adjust Piece	1			
DX175	14	60073409	Impact Adjust Button	1			
DX175	15	60073410	Metal Plate	1			
DX175	16	60073411	Rotor	1		1%	
DX175	17	60073412	Rolling Bearing	1			
DX175	18	60073413	Bearing Sleeve	1			
DX175	19	60073414	Stator	1			
DX175	21	60073415	Upper/Lower Housing body	1			
DX175	22	60073416	Plastic block	2			
DX175	23	60073417	Carbon brush(pair)	1		5%	
DX175	24	60073418	Brush housing	2			
DX175	25	60073419	Forwarder/ reverse knob	1			
DX175	26	60073420	Inductor	1			
DX175	27	60073421	Switch FA2-4/1BEK	1			
DX175	28	60073422	Two Capacitor 0.22uF 250V	1			
DX175	29	60073423	Cable Armor	1			
DX175	30	60075682	Cable & Plug	1	for AE-BS		
DX175	30	60073424	Cable & Plug	1	for AE-VDE		
DX175	30	60074269	Cable & Plug	1	for BR		
DX175	31	60073425	Tapping Screw ST4x16	1			
DX175	34	60073426	Chuck Key	1			
DX175	35	60073427	Auxiliary Handle Assembly	1			
DX175	36	60073428	Depth Gauge	1			
DX175	101	60073429	Spindle Set	1		1%	
DX175	102	60073430	Rotor Set	1		1%	
DX175	103	60073431	Carbon Brush Assembly	2		5%	